ISSN 2395-1621

# Milk Monitoring System

Vaibhav Patil, Sujyot Butale, Pratik Nimbale, Omkar Ware,
Keshav Malkhede, Prof.S.M.Bhadkumbhe

vnpatil199@gmail.com,
sjytbutale19@gmail.com,
pratiknimbale26898@gmail.com,
wareomkar912@gmail.com,
mkkeshav12@gmail.com

Department of Computer Engineering
PDEA's College of Engineering,Manjari Bk,Pune

**ABSTRACT**

**The milk is the dietary fluid secreted by the mammary gland of mammals. The high quality milk should have better density and is free from the adulterants. Milk is most commercially sold commodity both by local vendor's as well super markets. However in local areas to increase the yield certain adulterants are added which may affect the nutritional quality of milk. Milk adulteration is a social problem. It exists both in the backward and advanced countries. Consumption of adulterated milk causes serious health problems and a great concern to the food industry. The Country milk producers and consumers facing problem to find the quality of milk, accept the fair of price and consumption. So it is necessary to ensure the quality of milk by measuring type and amount of adulterants that are added to the milk. This project is implemented using ESP8266 Wi-Fi microcontroller. All the sensors like temperature, PH level, gas sensor and buzzer for alert generate are combined to form compact and flexible system which analyze and classify the quality of milk into different grades and finally output displayed on admin screen. Problem faced in small diaries and by the individuals can be prevented by detecting the quality of milk, and prevent from causing the hazardous diseases by detecting the adulteration of milk.**

**Keywords: ESP8266 controller, Ph Sensor, Temperature sensor, Gas Sensor, Milk Monitoring**

ARTICLE INFO

**Article History**

Received: 8th June 2021

Received in revised form : 8th June 2021

Accepted: 10th June 2021

**Published online : 11th June 2021**

## I. INTRODUCTION

Milk is a pale liquid produced by the mammary glands of mammals. It is the primary source of nutrition for infant mammals before they are able to digest other types of food. Early lactation milk contains colostrums, which carries the mother's antibodies to its young and can reduce the risk of many diseases. The principal constituents of milk constitutes of carbohydrate, fat, protein, vitamins and minerals, enzymes etc. The composition of milk varies considerably with the breed of cow, stage of lactation, feed, season of the year, and many other factors. However, some relationships between constituents are very stable and can be used to indicate whether any tampering with the milk composition has occurred. Milk is an emulsion or colloid of butterfat globules within a water-based fluid that contains dissolved carbohydrates and protein aggregates with minerals. Because it is produced as a food source for the young, all of its contents provide benefits for growth. The principal requirements are energy (lipids, lactose, and protein), biosynthesis of non-essential amino acids supplied by proteins (essential amino acids and amino groups), essential fatty acids, vitamins and inorganic elements and water.

In recent years, there are three major problems namely food safety, human safety and water safety. Our project is choosing to the food safety. Now a day, the need of milk for children is very important that providing good quality milk by milk quality tester. This project consists of temperature sensor can be used to measure the temperature in the milk. The pH sensor can be used to measure the pH of the milk. It also display whether milk is edible or not. LCD interfaced with microcontroller to display the value of temperature, pH in the milk. Milk is a white liquid produced by the mammary glands of mammals. It is the primary source of the nutrition for young mammals before them able to digest other types of food. As an agricultural product, milk is extracted from mammals during or soon after pregnancy and used as food for the humans. Throughout the world, more than 11 billion consumers of milk and milk products are there and 70% of child deaths every year are attributed to malnutrition. Thus milk is a major food for the infants. Milk

 

testing and quality control is an essential component of any milk processing industry whether small.

Problem Statement:

The existing problem is that to not maintain the quality of the milk and security in the milk production environment area. If not maintain the quality and security then milk production and productivity not maintain. Thus we solve the issue using the IoT and Sensor based system.

## II. LITERATURE SURVEY

Priti Chakurkar; Sajeeda Shikalgar; Debajyoti Mukhopadhyay. [1] This system has the capability to reduce milk spoilage significantly and if used worldwide then would produce in tons of data that will help to improve not only milk transportation but also customer satisfaction. The ultimate goal of the project is to benefit the milk production industry and the end consumer of the dairy products.

R Kadam; K. P. Shinde. [2] System model presented works with creating real time milk quality checking tool by combining two different techniques first one is gas sensors array and other one is wireless real time query checking. This system contains Heterogeneous sensors in a distributed system and performs communication with real world. The system can be used to find out the various bacteria present in raw milk which performs spoilage of milk and if consumed not well for human health. This system is much cost effective and portable one. This system prevents the people from to avoid the adulteration and maintains the quality of the milk. System is adaptable one as when compared with existing system we will get improved response time and selectivity also.

Lucas de Souza Ribeiro et. al. [3] states that using a cryoscope, detection of water adulteration in milk can be performed. The GaAsSb sensors, which show quick reaction and great affectability to the NIR range, were utilized to distinguish diffusely reflected light. The proposed instrument was tried on milk tests corrupted with water. The outcomes displayed high coefficients of assurance, higher than 0.99. In this manner, the created framework might be utilized for identification of milk debasement.

Carla Margarida Duarte et. al.[4] developed a attractive counter that identifies the nearness of Streptococcus agalactiae (a Group B Streptococci) in crude milk. This gadget permits the investigation of crude milk without crossing over the microfluidic channels, making this incorporated stage exceptionally appealing for quick bacteriological pollution screening.

Wesley Becari et.al. [5] developed a methodology for the detection of bovine milk adulteration by applying electrical impedance measurements. The classification of the results is proposed through ak- nearest neighbors algorithm that allows to quantitatively qualify the samples of pure and adulterated milk.

## III. PROPOSED SYSTEM

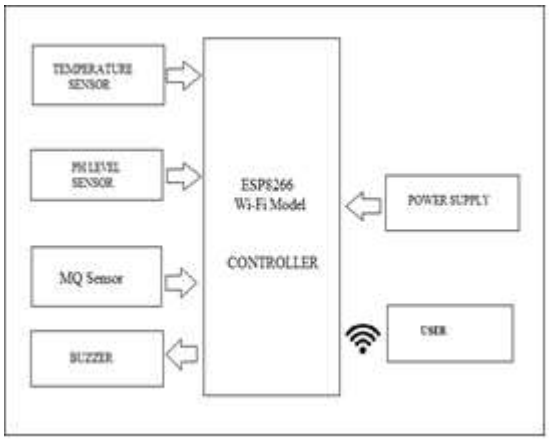


Fig 1. Block Diagram

***Description***:

Here, IoT based ESP8266 Microcontroller is used which can drive by 3V DC supply; the quality of the milk is maintained by using the smart sensors the temperature sensor helps in monitoring the temperature of the milk. The viscosity sensor measures the viscosity of the milk, the gas sensor used to detect the odour of the milk, the milk level sensor is used to measure quantity of milk, and the salinity sensor detects the salinity of the milk. If there is an emergency the buzzer will be blown, all these statuses will be shown figure 1.

## IV. CONCLUSION

Everyone in the society need to know the quality of milk before consuming it. Milk testing and quality control is an essential component of any milk processing industry whether small, medium or large scale. Milk quality control is the use of approved tests to ensure the application of approved practices, standards and regulations concerning the milk and milk products. Also check the milk production environmental temperature and gases values for maintain the milk quality using the IoT.

## REFERENCES

[1] Priti Chakurkar; Sajeeda Shikalgar; Debajyoti Mukhopadhyay, An Internet of Things (IOT) based monitoring system for efficient milk distribution, International Conference on Advances in Computing, Communication and Control (ICAC3), IEEE 2018.

[2] P. R Kadam; K. P. Shinde, Real Time Milk Monitoring System, 978-1-5386-5257-2/18/$31.00©2018IEEE.

[3] Lucas de Souza Ribeiro; Fábio Augusto Gentilin; José Alexandre de França; Ana Lúcia de Souza Madureira Felício; Maria Bernadete de M. França "Development of a Hardware Platform for Detection of Milk Adulteration Based on NearInfrared Diffuse Reflection" IEEE Transactions on Instrumentation and Measurement, Year: 2016, Volume: 65, Issue: 7, DOI: 10.1109/TIM.2016.2540946

[4] Carla Margarida Duarte; Ana Carolina Fernandes; Filipe Arroyo Cardoso; Ricardo Bexiga; Susana Freitas Cardoso;

 

Paulo J. P. Freitas "Magnetic Counter for Group B Streptococci Detection in Milk" IEEE Transactions on Magnetics, Year: 2015, Volume: 51, Issue: 1, Article Sequence Number: 5100304, DOI: 10.1109/TMAG.2014.2359574.

[5] Gabriel Durante; Wesley Becari; Felipe A. S. Lima; Henrique E. M. Peres "Electrical Impedance Sensor for Real-Time Detection of Bovine Milk Adulteration" IEEE Sensors Journal, Year: 2016, Volume: 16, Issue: 4, DOI: 10.1109/JSEN.2015.2494624.

 